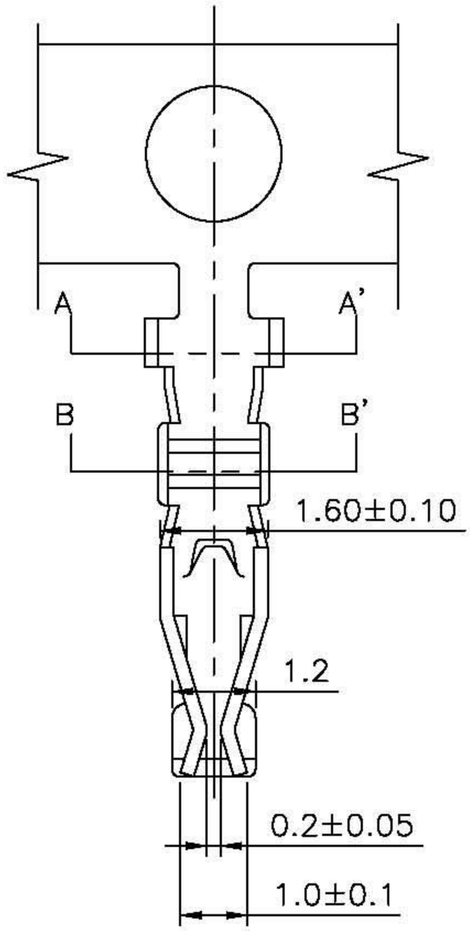

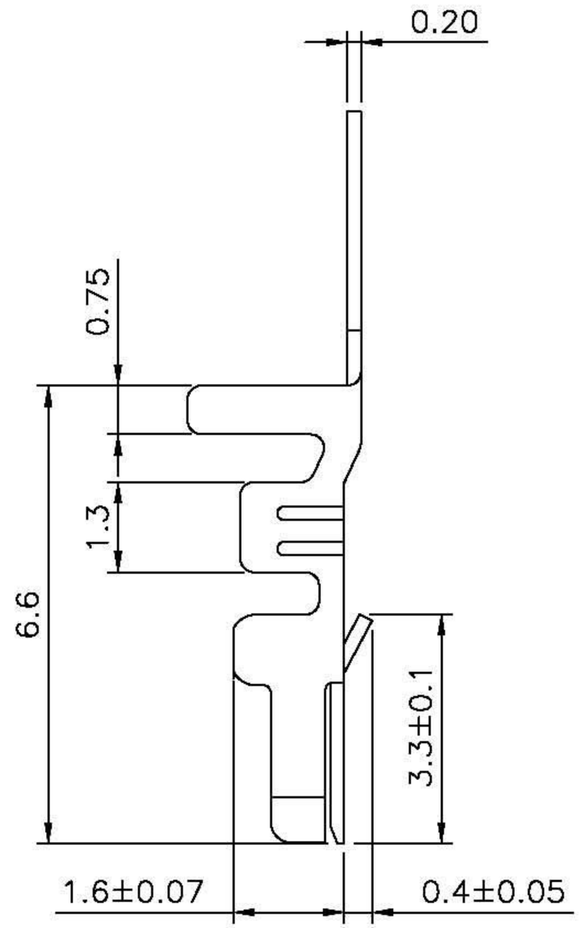

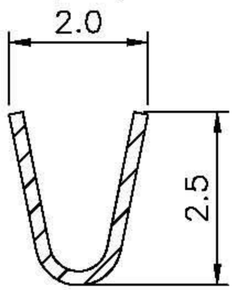

Section: A–A'

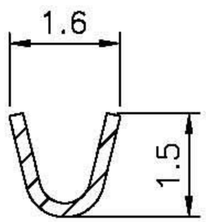

Section: B–B'

■ SPECIFICATIONS

- Voltage Rating : 250V AC/DC
- Current Rating : 3A AC/DC
- Withstanding Voltage : 800V AC/minute
- Insulation Resistance : 1,000MΩ min
- Temperature Range : - 25℃ to + 85℃
- Contact Resistance : 20mΩ max

■ TERMINAL

- Part No. : JS-2007-XT
  JS-2007-T : GP Produces
  JS-2007-0T : Non GP Produces
- Applicable Wires : AWG# 22 - 28
- Material : Phos. Bronze
- Finish : Tin Plated
- Thickness : 0.2mm
- Q' ty: 10,000 pcs./Reel

PENZEL COMERCIO EXTERIOR LTDA.	APPROVED BY	SCALE	UNIT	TOLERANCE		LTR	REVISION RECORD	DATE
	林陳鑠	4:1	mm	.0	±0.3	ECR	200505–005	2005/05/17
	CHECKED BY	PROJ	VER NO.	.00	±0.2			
				.000	±0.1			
PART NO JS–2007–T	曲智浩		a1	ALL	±			
	DRAWN BY	DATE	SIZE	ANGLE				
2.00mm Crimp Style Connectors Terminal	龔志紅	2005/05/17	A4	0°	±			
				.0°	±			